ISSN 2347 - 3983

International Journal of Emerging Trends in Engineering Research (IJETER), Vol. 3 No.1, Pages : 27 – 29 (2015)
Special Issue of ICEEMC 2015 - Held during January 27, 2015, Chennai, India

SWING GENERATOR USING POWER ELECTRONICS

Baratraj E [1], Devarapalli Prudhvi Raja Reddy [2],Mubeena.M.M [3]
[1] KCG College of Technology - Chennai-97, India, ebr6491@gmail.com
[2] KCG College of Technology - Chennai-97,India, prudhvirajareddy304@gmail.com,
[3] KCG College of Technology - Chennai-97,India, mubeena.mohammedsali@gmail.com

Abstract: The paper deals with the process of generating electric power using gravitational force. Here we use a swing set which involves in the conversion of gravitational force into mechanical energy and PMDCG which is used in generating electric power. The motion of swing is oscillatory, hence the movement of generator coupled to it follows the direction of swing. This unusable form of electric energy is converted to useable electric energy by implementing power electronic devices.

Key words : DC-DC Converter, PMDC generator, Swing generator, Tug of War.

INTRODUCTION

Electric energy is the driving force of the modern world. Without electric power almost nothing is possible in modern world. The more we depend on electric power , the demand for electric energy increases. On other hand, fossil fuels which is the major source of electric energy conversion decreases. Hence it is necessary to switch to renewable resources for increasing energy demand. Here we propose a method of producing electric power using gravitational force. It is done by a system consisting of a swing set ,PMDCG and power electronic devices.

GRAVITATIONAL FORCE

Each object present in the universe attract other object towards it and vice-versa [4]. Gravitational force is one of the fundamental forces of nature, it is used to keep our planet, a stone , a computer and each and every object in its position. Each object attracts other object towards it, and the force of attraction is directly proportional to its mass. This is similar to a Tug of War, each object attracts the other and maintain its position.
This given by the equation (1)

Force of attraction between mass m_1 and m_2

$$F = \frac{G\, m_1 m_2}{r^2} \qquad (1)$$

Where,

G-gravitational constant ($6.673 \times 10^{-11} N \left(\frac{m}{kg}\right)^2$)

m_1 ,m_2 – mass of object 1 and object 2
r – distance between center of mass

FORCE TO ENERGY

Each object attracts other object towards it, if the force of attraction of m_1 is greater than m_2 , than m_2 is attracted towards m_1. During this mass m_2 travels a distance r to reach m_1 . It is known that when a object is in motion , has kinetic energy which is given by equation (2).

Kinetic energy of the moving object is

$$K.E = \frac{1}{2} m v^2 \qquad (2)$$

where,
m is mass of object moving
v is velocity of the moving object

FORCE TO ENERGY CONVERSION IN SWING

Operation of Swing is similar to the pendulum, as seen in the above example , is m_1 earth and m_2 is a swing attached to a point and dropped from the height h. The object tries to fall on the earth surface. But string attached to it , makes the swing to make a circular path[3]. Hence while swing swings the energy is stored in the form of kinetic energy . And at a maximum point P, the object cannot oppose the gravity . At this point its kinetic energy is stored in the form of potential energy. This energy is released in the next motion. This is how gravitational force is converted into mechanical energy [1]. The kinetic energy is given in equation (2) .potential energy is given in equation (3) and potential energy of swing is given by (3) .

Potential energy is given by

$$P.E = mgh \qquad (3)$$

Potential energy of swing is given by

$$P.E = mgL(1 - \cos\theta) \qquad (4)$$

where,
m- mass of object
h- height at which the object placed.
g- gravitational constant (9.8 m/s)
L- length of the swing
θ- angle of swing

PROPOSED SYSTEM

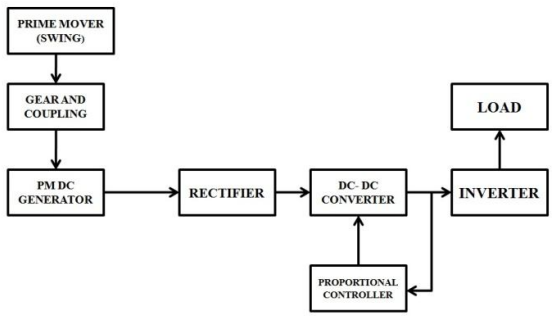

Fig 1: Block diagram of proposed system

The Fig 1. shows the block diagram of the proposed system. It consist of a prime mover which is a swing set. The time period of oscillation is low, in order to achieve rated speed of the PMDC no. of poles of the generator is increased [1]. The swing set swings and produces a oscillatory motion. The shaft of the prime mover is connected to the permanent magnet DC generator through gears and coupling [5]. The oscillatory motion of the swing produces forward and backward rotation in the gear box, gears are used to increase the speed of rotation. The PMDC generator connected to the gear box shaft produces electric power in positive and negative direction. This electric power is neither pure DC nor a AC and cannot be used for any application . The rectifier is connected to the generator and converts this unusable form of PMDC generator output into DC. The output is connected to the DC-DC Boost converter it is used to boost the rectifier output [2] and maintain constant output voltage through closed loop operation. This can be used to run the DC loads or a Inverter is used to convert the DC to AC as all our domestic loads are AC loads.

SIMULINK MODEL OF PROPOSED SYSTEM

The fig 2. Shows the SIMULINK model of our proposed system. The subsystem swing and coupling generator give the speed reference to the permanent magnet DC generator. So, generator output depends on the swing.

Time period of a oscillation of swing is given by

$$T = 2\pi\sqrt{\frac{L}{g}} \qquad (5)$$

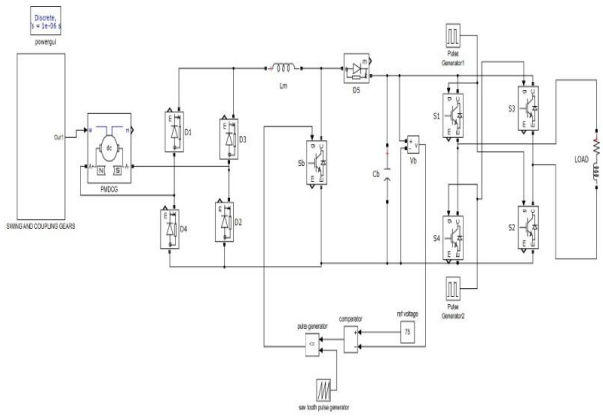

Fig 2: SIMULINK model of proposed system

Output power of the permanent magnet DC generator is given by

$$E_G = \frac{\emptyset ZN}{60} \times \left(\frac{P}{A}\right) \qquad (6)$$

The output voltage of the rectifier is given by

$$V_{dc} = \frac{2}{T}\int_0^{T/2} V_m \sin wt \, dt \qquad (7)$$

Boost converter performs two operation, it step up the voltage and also maintains constant voltage in the system.

The output voltage of boost converter is given by

$$V_{out} = \frac{V_s}{1-k} \qquad (8)$$

Output voltage equation of Inverter which is used to convert dc to ac is given by

$$V_0 = \sqrt[2]{\left(\frac{2}{T_0}\int_0^{\frac{T_0}{2}} V_s^{\,2} \, dt\right)} \qquad (9)$$

SIMULATION RESULTS

Simulation is conducted using a 100 watt PMDC generator ,with a child of mass 30 kg playing in a swing of 3 m length in MATLAB and the results are as follows.

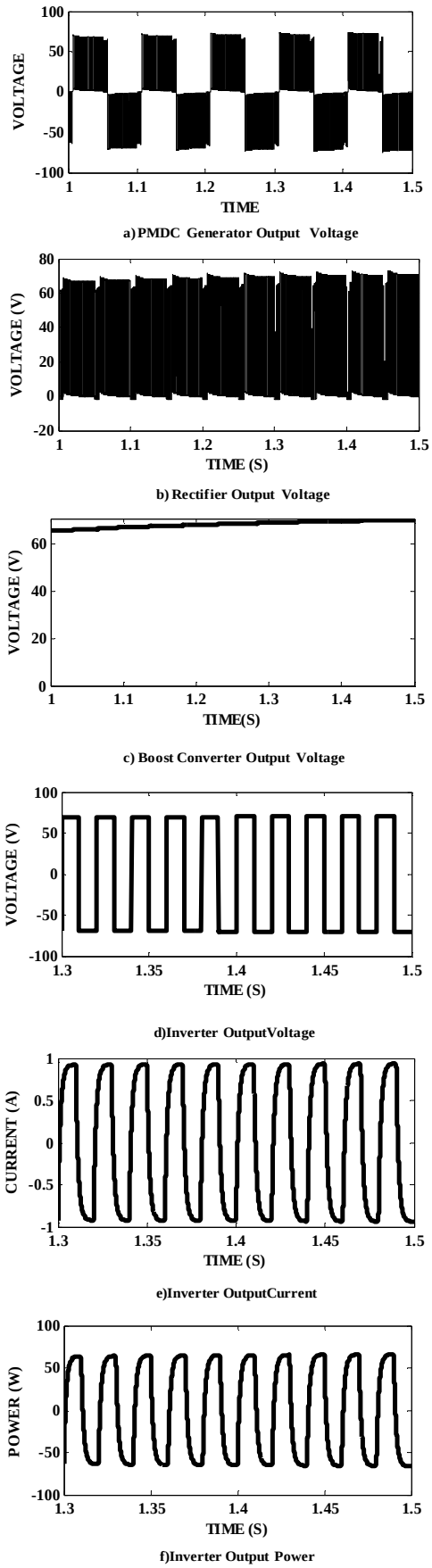

Fig 3: Simulation Results

It is seen that permanent magnet DC generator output is alternating in nature. This because of the oscillation of swing. The swing swings forward and reverse direction when kids plays. Hence the gear coupled to the swing moves in forward and reverse direction.

The DC generator coupled to the gear, also rotates in forward and reverse direction. Fig 3.a shows the output of the permanent magnet DC coupled to the swing and gear. This is neither a pure DC nor a AC power. This cannot be used to run any load. Fig 3.b shows the unidirectional output of uncontrolled rectifier.

The motion of the swing is not always constant. Hence the voltage of DC generator connected to the swing also varies. The constant output voltage is achieved by Boost converter.Fig.3.c shows the output of the boost converter. Fig 3.d, Fig 3.e, Fig 3.f shows the output waveform of inverter voltage, inverter current and inverter power.

CONCLUSION

The simulation results shows the power produced when a average weighted child plays in a swing. we are in the situation to save and generate electric power when and wherever it is possible . This swing generator installed in parks , schools play grounds etc., reduces the electric power requirement of parks, schools, play grounds etc., by providing lighting , running water pumps etc..,

REFERENCES

[1] E. Baratraj, P. Arulmani, A. Kalaiyarasan. "Generating Electric Power using G-Force", in *proc. 2012 International conference on emerging trends in electrical engineering and energy management (ICTEEEM)*,2012, pp. 5.1-1-5.1-3

[2] Saurabh Kasat, "Analysis, Design And Modeling of DC-DC Converter Using SIMULINK", The Degree Of MASTER OF SCIENCE The Graduate College Of The Oklahoma State University, Stillwater, OK 74074,US, December, 2004

[3] Motion of swing and related theories available in http://hyperphysics.phy-astr.gsu.edu/

[4] Theories related to gravitational force, available in http://www.physicsclassroom.com/

[5] Theories related to gears, available in http://www.societyofrobots.com/